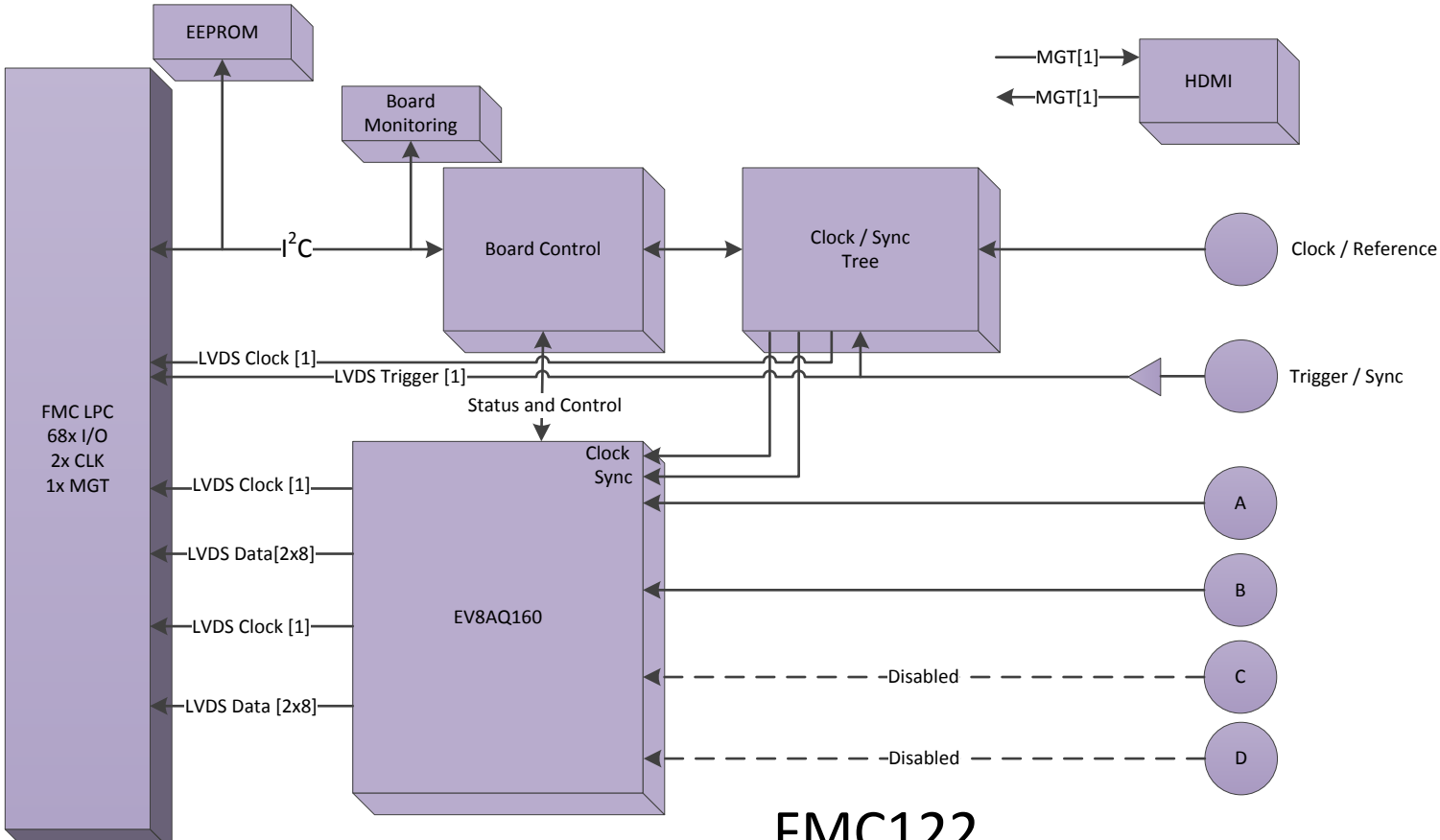

FMC122

FMC-LPC Analog-to-Digital Converter Board
Multi-Channel Multi-Mode 8-bit ADC
1.25 Gsps / 2.5 Gsps
FMC VITA 57.1 Compliant